TLC SERIES-Spring clamp connectors — Operating lever — TLC-A01

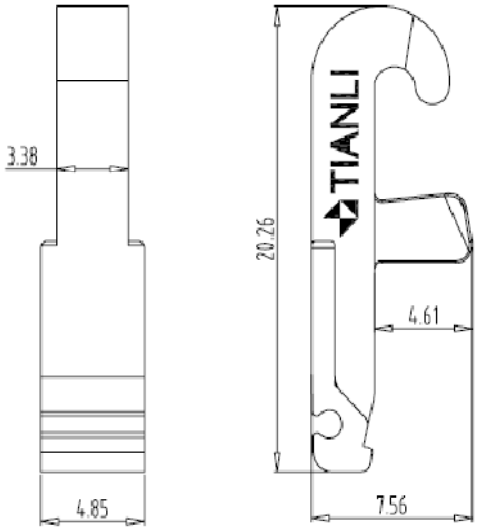

图示(Pic. shown)：TLC-A01

General.	Operating lever
	Insulation Material: PA66G20 UL94-HB
	适用产品 Apply product：
	TLCP/L/M/W-200/300/400/500 Series

认证（Approval）：

技术参数Technical Data	UL standard			IEC standard		
UL应用组别(UL Application group)	UL Application group			IEC过电压别/污染等级(IEC overvoltage category /pollution degree)		
IEC过电压别/污染等级(IEC overvoltage category /pollution degree)	B	C	D	III / 3	III / 2	II / 2
额定电压(Rated voltage)	--	--	--	--	--	--
额定电流(Rated current)	--	--	--	--	--	--
额定连接容量(Rated connection capacity)	--			--		

绝缘材料(Insulation Material)	PA66GF
电流承载部件材料和镀层(Material & Plating of Current carrier)	--
接线弹片材料(Material of Clamp spring)	--
绝缘电阻(Insulation Resistance)	--
耐电压(1分钟)(Withstanding Voltage/1Min)	--
额定冲击电压(Rated surge voltage)	--
接线螺丝(Wire clamp unit Screw)，最大扭矩(torque Max.)	--
固定螺丝(Mounting Screw)，扭矩(torque)	--
剥线长度(Wire stripping length)	--
使用温度(Operating temperature)	-40°C up to +125°C
焊接方式(Soldering recommend)	--

订购方式(How to order)

TLC	—	A01
Series No. 系列号		Differentiate Number 区分号

Web:wwww.china-tianli.com TEL:+86-574-6347-9600,6389-6436 Mail：sale@china-tianli.cn
地址:中国浙江省宁波杭州湾新区庵东工业园区纬三路138号
ADD：138，Weisan Rd.,Andong Development Zone,Hangzhou Bay Area,Ningbo,Zhejiang,China