FILE: TL\103\TL103V-XXP-XS

REV	E.C.N NO.	CONTENT	CHK	DATE
V2.0	S2307003	Update the drawing	GJJ	2023.07.07

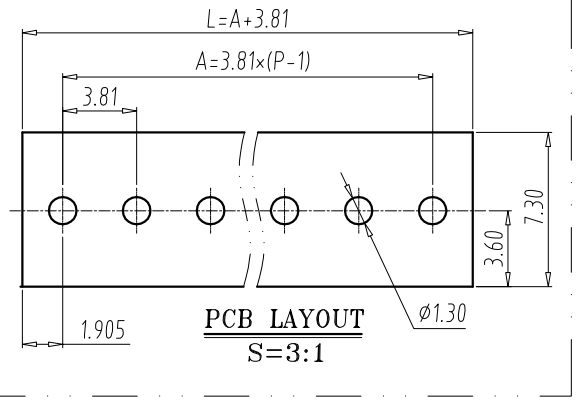

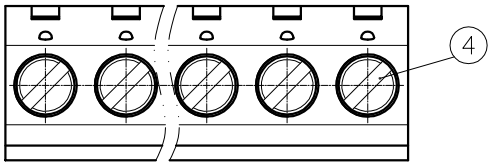

NOTES:

1. UL:
   Rating:300V,10A;
   Insulation Withstands Voltage:AC1600V/MIN;
   Suitable Electric Wire:26AWG~16AWG
   Using Temperature Range:-40℃~+105℃;
2. IEC:
   Rating:160V,16A;
   Rate Impulse Voltage:2500V;
   Insulation Resistance:500MΩ or more at DC500V;
   Contact Resistance: ≤5mΩ
   Material Group: Ⅰ;
   Pollution Degree:2;
   Overvoltage Category:Ⅲ;
   Suitable Electric Wire:0.2mm²~1.5mm²
   Using Temperature Range:-40℃~+120℃;
3. Screw Torque Value:0.2N•m
4. Strip length:5.0-6.0mm
5. RoHS compliance;

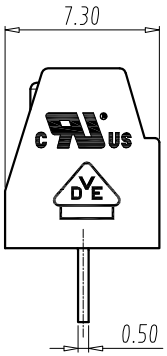

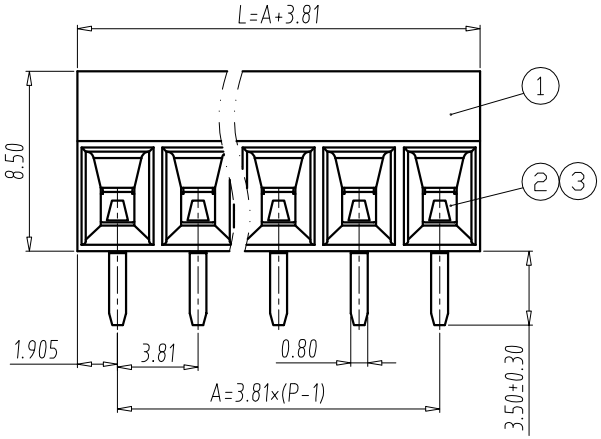

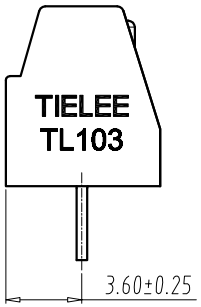

DIM \ P	2	3	4	5	6	7	8	9	10	11	12
L	7.62	11.43	15.24	19.05	22.86	26.67	30.48	34.29	38.1	41.91	45.72
A	3.81	7.62	11.43	15.24	19.05	22.86	26.67	30.48	34.29	38.1	41.91

DIM \ P	13	14	15	16	17	18	19	20	21	22	23	24
L	49.53	53.34	57.15	60.96	64.77	68.58	72.39	76.2	80.01	83.82	87.63	91.44
A	45.72	49.53	53.34	57.15	60.96	64.77	68.58	72.39	76.2	80.01	83.82	87.63

Total Pitch Tolerances in mm									Nominal dimension range in mm								
over 0 to 30	over 30 to 53	over 53 to 70	over 70 to 90	over 90 to 115	over 115 to 150	over 150 to 200	over 200 to 250	over 250 to 320	over 0 to 30	over 30 to 53	over 53 to 70	over 70 to 90	over 90 to 115	over 115 to 150	over 150 to 200	over 200 to 250	over 250 to 320
±0.20	±0.25	±0.3	±0.35	±0.44	±0.55	±0.70	±0.85	±1.00	±0.25	±0.30	±0.35	±0.44	±0.55	±0.70	±0.80	±0.90	±1.20

ITEM	NAME OF PART	Q"TY	MATERIAL	NOTE
4	SCREW	P	STEEL	M2/Zn Plated
3	BLOCK	P	Copper Alloy	Ni Plated
2	SOLDER PIN	P	Copper Alloy	Tin Plated
1	HOUSING	1	PA66	UL94 V-0

DWG.	ZHT	DATE	2021.03.08	UNITS	MM	SHEET/OF	1/1
CHK.		DATE		SCALE	3 : 1	A4	
APP.		DATE		NAME	TL103V-XXP-XS		
TIANLI ELECTRICAL MACHINERY(NINGBO)CO.,LTD.				DWGNO.	TLDW-TL103VXXPXS		