FILE: TLM\250\TLM-250C-XXP-X

REV	E.C.N NO.	CONTENT	CHK	DATE
V1.0		ORIGINAL	hyt	2021.01.18

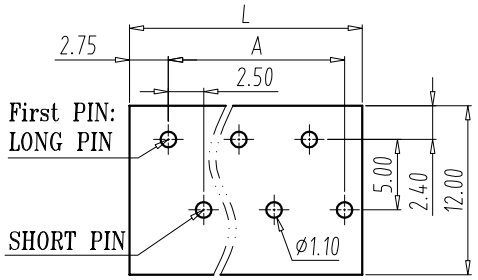

PCB LAYOUT
S=2:1

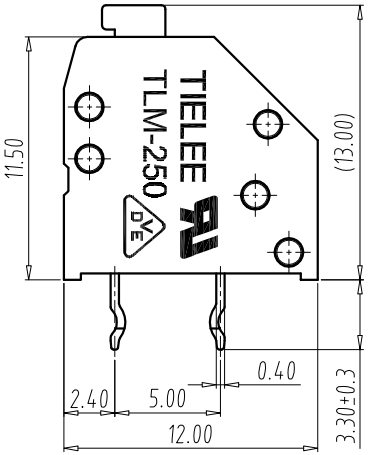

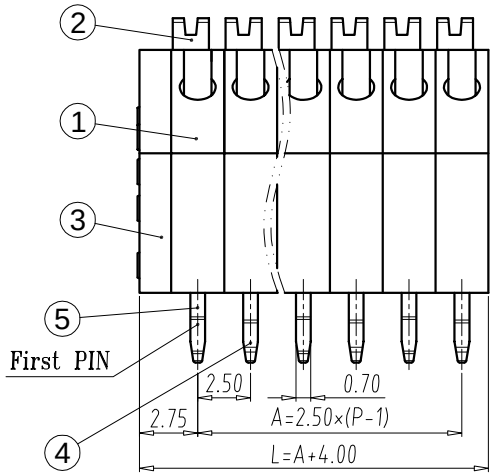

NOTES:

1. UL:
   Rating: 250V, 2A;
   Insulation Withstands Voltage: AC1500V/MIN;
   Suitable Electric Wire: 20AWG
2. IEC:
   Rating: 250V, 2A;
   Rate Impulse Voltage: 4000V;
   Insulation Resistance: 500MΩ or more at DC500V;
   Contact Resistance: ≤5mΩ;
   Material Group: Ⅰ;
   Pollution Degree: 2;
   Overvoltage Category: Ⅲ;
   Suitable Electric Wire: 0.2~0.5mm²
3. Using Temperature Range: -40℃~+105℃;
4. Strip length: 8.0-9.0mm;
5. RoHS compliance

DIM \ P	02P	03P	04P	05P	06P	07P	08P	09P	10P	11P	12P	
A	2.5	5.0	7.5	10.0	12.5	15.0	17.5	20.0	22.5	25.0	27.5	
L	6.5	9.0	11.5	14.0	16.5	19.0	21.5	24.0	26.5	29.0	31.5	
DIM \ P	13P	14P	15P	16P	17P	18P	19P	20P	21P	22P	23P	24P
A	30.0	32.5	35.0	37.5	40.0	42.5	45.0	47.5	50.0	52.5	55.0	57.5
L	34.0	36.5	39.0	41.5	44.0	46.5	49.0	51.5	54.0	56.5	59.0	61.5

Total Pitch Tolerances in mm									Nominal dimension range in mm								
over 0 to 30	over 30 to 53	over 53 to 70	over 70 to 90	over 90 to 115	over 115 to 150	over 150 to 200	over 200 to 250	over 250 to 320	over 0 to 30	over 30 to 53	over 53 to 70	over 70 to 90	over 90 to 115	over 115 to 150	over 150 to 200	over 200 to 250	over 250 to 320
±0.20	±0.25	±0.30	±0.35	±0.44	±0.55	±0.70	±0.85	±1.00	±0.25	±0.30	±0.35	±0.44	±0.55	±0.70	±0.80	±0.90	±1.20

ITEM	NAME OF PART	Q"TY	MATERIAL	NOTE
5	LONG PIN	EVEN P/2 ODD (P+1)/2	COPPER ALLOY	Tin Plated
4	SHORT PIN	EVEN P/2 ODD (P-1)/2	COPPER ALLOY	Tin Plated
3	COVER	1	PA66	UL94 V-0
2	LEVER	P	PA66	UL94 V-0
1	HOUSING	P	PA66	UL94 V-0

DWG.	hyt	DATE	2021.01.18	UNITS	MM	SHEET/OF	1/1
CHK.		DATE		SCALE	3 : 1	A4	
APP.		DATE		NAME	TLM-250C-XXP-X		
TIANLI ELECTRICAL MACHINERY(NINGBO)CO.,LTD.				DWGNO.	TLDW-TLM-250C-XXP-X		