FILE: TLM-404R-XXP-X

| REV | E.C.N NO. | CONTENT | CHK | DATE |
|---|---|---|---|---|
| V1.0 | | ORIGINAL | ZX | 2024.10.23 |

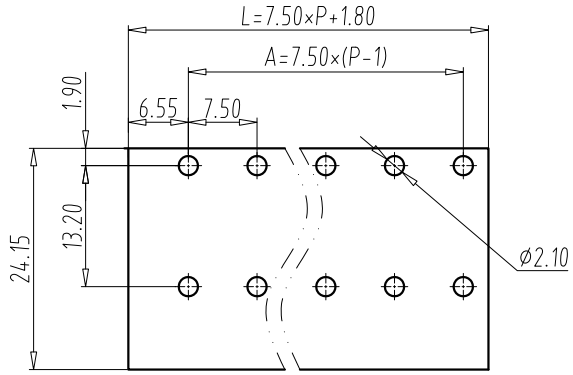


PCB LAYOUT

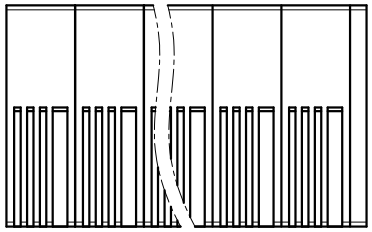

NOTES:

1. UL:
   Rating:300V,40A
   Insulation Withstands Voltage:AC1600V/MIN
   Suitable Electric Wire:24AWG~8AWG
   Using Temperature Range:-40℃~+115℃
2. IEC:
   Rating:1000V(01P), 630V(≥02P),41A
   Rate Impulse Voltage:8000V(01P), 6000V(≥02P)
   Insulation Resistance:500MΩ or more at DC500V
   Contact Resistance:≤5mΩ
   Material Group: Ⅰ, Pollution Degree:2
   Overvoltage Category:Ⅲ
   Suitable Electric Wire:0.2~6mm$^2$,10mm$^2$(SOL)
3. Using Temperature Range:-40℃~+115℃
4. Strip length:15mm
5. RoHS compliance

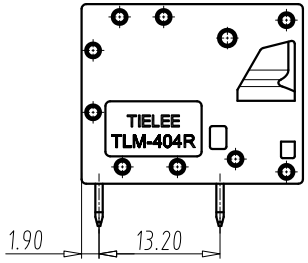


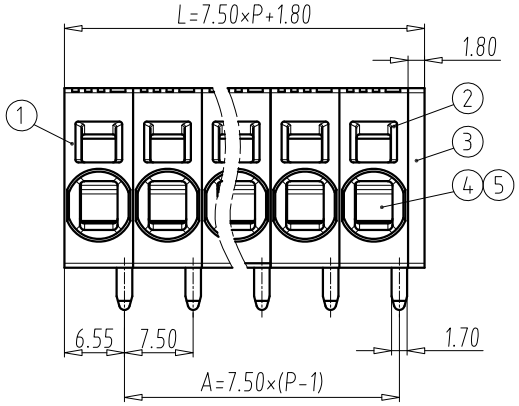


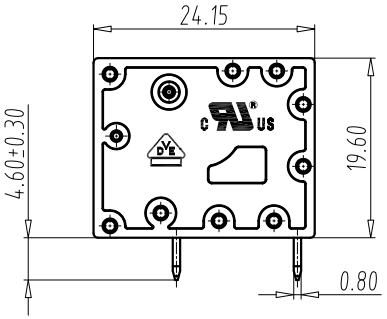


| DIM \ P | 01 | 02 | 03 | 04 | 05 | 06 | 07 | 08 |
|---|---|---|---|---|---|---|---|---|
| L | 9.3 | 16.80 | 24.30 | 31.80 | 39.30 | 46.80 | 54.30 | 61.80 |
| A | / | 7.50 | 15.00 | 22.50 | 30.00 | 37.50 | 45.00 | 52.50 |
| DIM \ P | 09 | 10 | 11 | 12 | 13 | 14 | 15 | 16 |
| L | 69.30 | 76.80 | 84.30 | 91.80 | 99.30 | 114.3 | 121.8 | 129.3 |
| A | 60.00 | 67.50 | 75.00 | 82.50 | 90.00 | 105.0 | 112.5 | 120.0 |

| Total Pitch Tolerances in mm | | | | | | | | | Nominal dimension range in mm | | | | | | | | |
|---|---|---|---|---|---|---|---|---|---|---|---|---|---|---|---|---|---|
| over 0 to 30 | over 30 to 53 | over 53 to 70 | over 70 to 90 | over 90 to 115 | over 115 to 150 | over 150 to 200 | over 200 to 250 | over 250 to 320 | over 0 to 30 | over 30 to 53 | over 53 to 70 | over 70 to 90 | over 90 to 115 | over 115 to 150 | over 150 to 200 | over 200 to 250 | over 250 to 320 |
| ±0.20 | ±0.25 | ±0.3 | ±0.35 | ±0.44 | ±0.55 | ±0.70 | ±0.85 | ±1.00 | ±0.25 | ±0.30 | ±0.35 | ±0.44 | ±0.55 | ±0.70 | ±0.80 | ±0.90 | ±1.20 |

| ITEM | NAME OF PART | Q"TY | MATERIAL | NOTE |
|---|---|---|---|---|
| 5 | SPRING COIL | P | STAINLESS STEEL | / |
| 4 | SOLDER PIN | P | COPPER ALLOY | Tin Plated |
| 3 | COVER | 1 | PA66 | UL94V-0 |
| 2 | HOUSING-2 | P-1 | PA66 | UL94V-0 |
| 1 | HOUSING-1 | 1 | PA66 | UL94V-0 |

| | | | | | | | |
|---|---|---|---|---|---|---|---|
| DWG. | ZHT | DATE | 2021.03.22 | UNITS | MM | SHEET/OF | 1/1 |
| CHK. | | DATE | | SCALE | 1.25 : 1 | A4 | |
| APP. | | DATE | | NAME | TLM-404R-XXP-X | | |
| TIANLI ELECTRICAL MACHINERY(NINGBO)CO.,LTD. | | | | DWGNO. | TLDW-TLM404RXXPX | | |